PRODUCT SPECIFICATION

SWEP V120T, 0102077.0-Preconfig

Configuration number (CN) with sort key: 0102077.0-Preconfig

Denomination: V120THx60/1P-SC-M 22U+42U+2x1 1/2"&35.1

Number of plates (NoP): 60

Standard dimensions

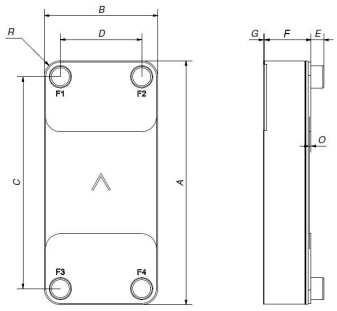

#	MM	IN
A	525 (+2/-2)	20.67 (0.08/-0.08)
B	243 (+1/-1)	9.57 (0.04/-0.04)
C	456 (+1/-1)	17.95 (0.04/-0.04)
D	174 (+1/-1)	6.85 (0.04/-0.04)
F	147 (+1/-2)	5.8 (0.03/-0.09)
G	4 (+1/-1)	0.16 (0.04/-0.04)
R	35	1.38

Measurement (Tolerance)

Connections

F = Front side connections, P = Back side connections

POSITION	ART. NO.	DENOMINATION	HEIGHT (E)	MATERIAL
F1	45083	SOLDER 42U NON-CASTED	27	Stainless Steel 316
F2, F4	32836	ISO-G 1 1/2" & SOLDER 35.1"	27	Stainless Steel 316
F3	45475	SOLDER 22U NON-CASTED	27	Stainless Steel 316

Accessories

Not visible in sketch

ART. NO.	DENOMINATION
21118	STUDBOLT LOC F B120T/50/200 4xM12x20 C140x100

PED Pressure / Temperature

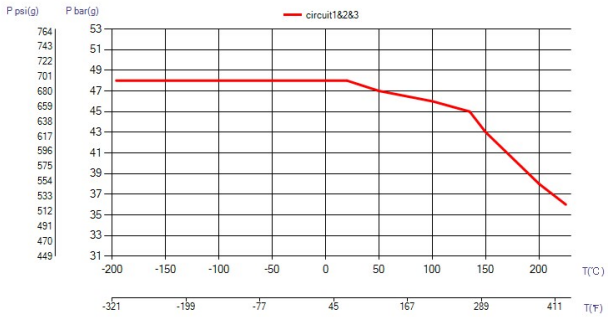

UL Pressure / Temperature

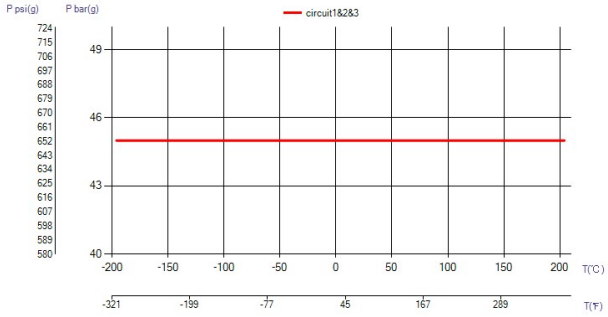

Product Data

PED Category	III
Total weight, including connections	34.0 kg
Total Heat Transfer area	7.7 m² (82.4 ft²)
Hold up volume circuit 1	6.989 dm³ (0.247 ft³)
Hold up volume circuit 2	7.23 dm³ (0.255 ft³)

MATERIALS

316/316L stainless steel plates, copper brazing

Disclaimer

The information and recommendations in regards to the products are presented in good faith, however, SWEP makes no representations or warranties as to the completeness or accuracy of the information. Information is supplied upon the condition that the purchasers will make their own determination as to the products' suitability for their purposes prior to use. Purchasers should note that the properties of the products are both application and material selection dependent and that products containing stainless steel are still object to corrosion if used in unsuitable environments. Standard data is presented, product variants with different data may exist. Contact your SWEP sales representative for more details. SWEP may change any data without notice.